Endfold 35 - Guide to Quantities

For Top Hung Interior Folding Partitions on Endfold Track Systems

This Guide to Quantities is only applicable to Data Sheets D110.

Specifications and Quantities

The specifications below and overleaf detail the maximum and minimum capacities for the track systems recommended. Panels are hinged together to form either one or two units of up to six panels each, with each unit pivoted to one side of the opening. Openings can be covered by units of four or six 'floating' panels which are not hinged to the opening. Floating systems must include a guide.

If the panel weight is unknown, the weight can be calculated using the chart in Section 'A'. Having calculated the weight, use the information below to select the appropriate track system and quantities for the unit or units required to cover the opening width.

Specification for Individual Panels

Track System	**Endfold 35**
Refer to Data Sheet	D110
Max Panel Height	2400mm
Max Panel Weight	35kg
Max Panel Width	900mm
Min Panel Thickness	35mm or 38mm with Flush Bolts
Max Number of Panels	6 each direction

2 Panel Unit Hinged to Post	**Quantities**	**Product Codes**
Track	See data sheet D50C	120A
Bracket (face fix)	See data sheet D50C	1SS/250
Hanger	1	35ENP
Hinges	6	282SS
Guide (optional)	1	106SSMF
Channel (optional)	See data sheet D50C	96W
Flush Pulls	2	401
Flush Bolt	1	456

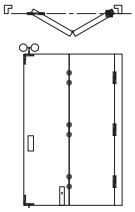

3 Panel Unit Hinged to Post Inc. Access Door	**Quantities**	**Product Codes**
Track	See data sheet D50C	120A
Brackets, (face fix)	See data sheet D50C	1SS/250
Hanger	1	35ENP
Hinges	9	282SS
Guide	1	106SSMF
Channel	See data sheet D50C	96W
Flush Pulls	2	401
Flush Bolt	1	456

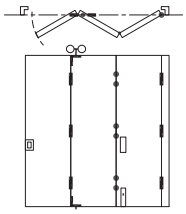

4 Panel Unit Hinged to Post	**Quantities**	**Product Codes**
Track	See data sheet D50C	120A
Bracket (face fix)	See data sheet D50C	1SS/250
Hanger	2	35ENP
Hinges	12	282SS
Guides	2	106SSMF
Channel	See data sheet D50C	96W
Flush Pulls	3	401
Flush Bolts	2	456

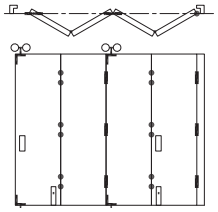

4 Panel 'Floating' Unit	**Quantities**	**Product Codes**
Track	See data sheet D50C	120A
Bracket (face fix)	See data sheet D50C	1SS/250
Hanger	3	35ENP
Hinges	9	282SS
Guides	2	106SSMF
Channel	See data sheet D50C	96W
Flush Pulls	3	401
Flush Bolt	2	456

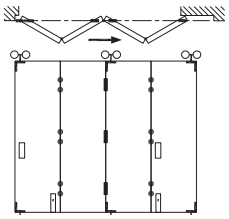

Endfold 35 - Guide to Quantities

For Top Hung Interior Folding Partitions on Endfold Track Systems

5 Panel Unit Hinged to Post Inc. Access Door	Quantities	Product Codes
Track	See data sheet D50C	120A
Bracket (face fix)	See data sheet D50C	1SS/250
Hanger	2	35ENP
Hinges	15	282SS
Guides	2	106SSMF
Channel	See data sheet D50C	96W
Flush Pulls	3	401
Flush Bolts	2	456

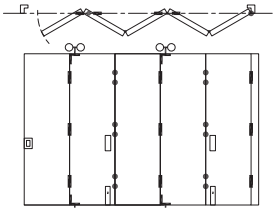

6 Panel Unit Pivoted to one side	Quantities	Product Codes
Track	See data sheet D50C	120A
Bracket (face fix)	See data sheet D50C	1SS/250
Hangers	3	35ENP
Hinges	18	282SS
Guides	3	106SSMF
Channel	See data sheet D50C	96W
Flush Pulls	4	401
Flush Bolts	3	456

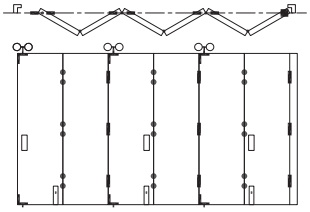

6 Panel 'Floating' Unit	Quantities	Product Codes
Track	See data sheet D50C	120A
Bracket (face fix)	See data sheet D50C	1SS/250
Hangers	4	35ENP
Hinges	15	282SS
Guides	3	106SSMF
Channel	See data sheet D50C	96W
Flush Pulls	4	401
Flush Bolts	3	456

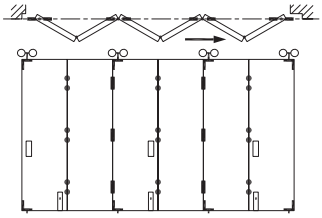

2 Additional Panels	Quantities	Product Codes
Hanger	1	35ENP
Hinges	6	282SS
Guide	1	106SSMF
Flush Pull	1	401
Flush Bolt	1	456

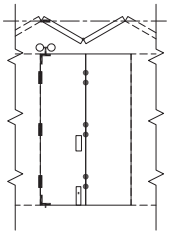

Application

Suitable for residential and light commercial end folding partitions.

Panels can fold to one or both sides of the opening and can be stacked behind a reveal if required.

To cover any width opening, any number of folding units can be used.

Panel Specification

Track System:	**Endfold 35**
For Individual Panels:	
Max Panel Height	2400mm
Max Panel Weight	35kg
Max Panel Width	900mm
Min Panel Thickness	35mm or 38mm with Flush Bolts

A guide system across the floor must be used on units of four panels or more.

Units of up to six panels can be hinged to a post. A unit with an odd number of panels, provides a hinged access door.

A guide system across the floor must be used on units of three panels or more. Floating units consist of four or six panels.

Panels should be constructed to provide secure fitting for the hangers, hinges and guides and can be flush, panelled or glazed.

Standard Packs

Pack No.	Hardware for	Content
EF35-APK	Add-on Pack	Hanger, guide, six hinges, all timber screws and instructions.
EF35-2PK	2 Panel Pack	Hanger, door stop, six hinges, all timber screws and instructions.
EF35-4PK	4 Panel Pack	Two hangers, door stop, two guides, twelve hinges, all timber screws and instructions.
EF35-6PK	6 Panel Pack	Three hangers, door stop, three guides, eighteen hinges, all timber screws and instructions.

For any folding units select one basic pack and sufficient EF35-APK add-on fitting packs and a suitable length of 100 track (see below) to cover width of opening.

Hardware Specification

Track:	120A
Material	Aluminium Anodised
Standard Lengths	2000mm, 3000mm, 4000mm & 6000mm

Bracket (Face Fix):

Bracket, 316 Stainless Steel	1SS/250

Brackets located close together at the pivot end of the track with other brackets at 400mm centres.

Hanger: 35ENP

Hanger fitted with nylon tyre wheels on ball race bearings. Vertical adjustment is simple and positive.

Guide: 106SSMF

Stainless steel plate with precision bearing

Hinge: 282SS

Stainless steel hinge for 19mm minimum panel thickness, 65mm tall, non-mortice

Channels:

Aluminium	96W
Finish	Clear Anodised
Standard Lengths	2000mm, 3000mm, 4000mm and 6000mm

Accessories:

Flush Pull	401
Flush bolt	456
Door stop	120DS

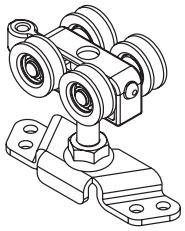

No. 35ENP
HANGER

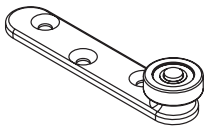

No. 106SSMF
GUIDE

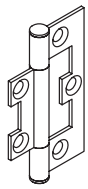

No. 282SS
HINGE

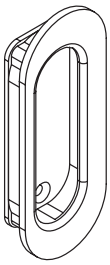

No. 401
FLUSH PULL

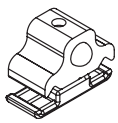

No. 120DS
DOOR STOP

No. 96W
CHANNEL

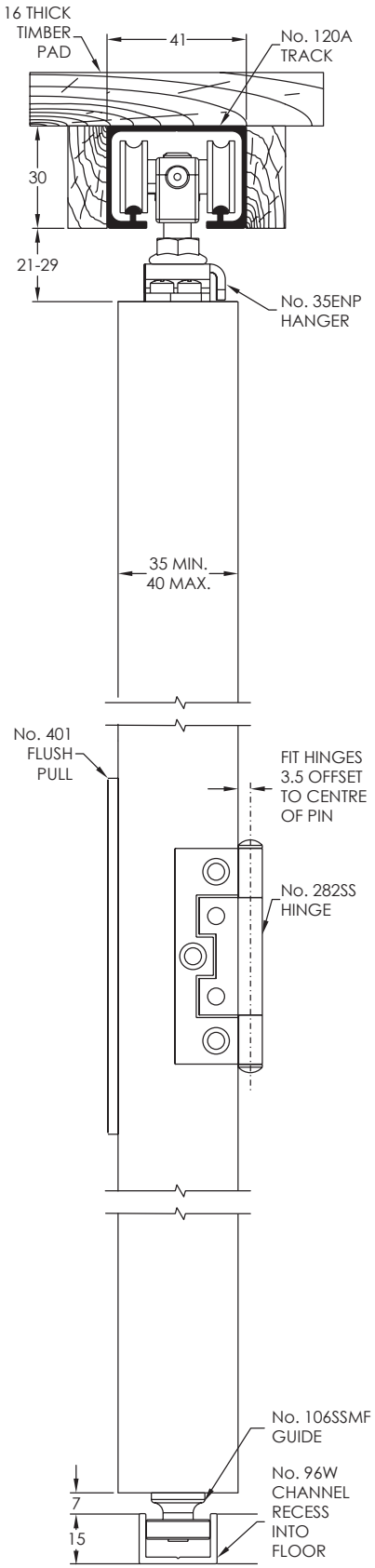

PANEL PREPARATION

No. 35ENP HANGER

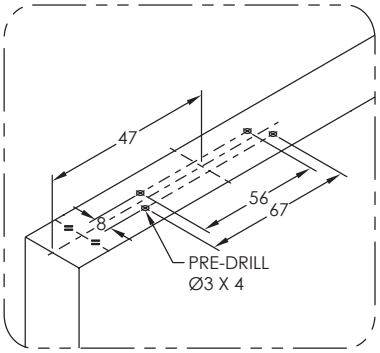

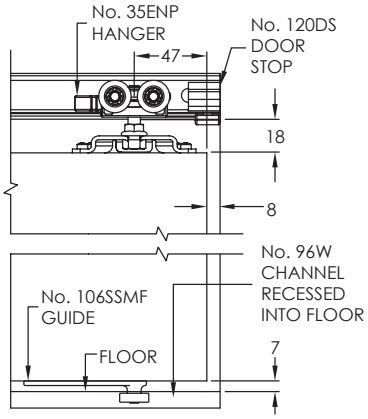

NOTE: IF USING No. 96W CHANNEL & FLUSH BOLTS 38MM MIN PANEL THICKNESS

4+1 PANEL SYSTEM - OPEN

(SHOWN WITHOUT TRACK, SILL OR HEAD SECTION)

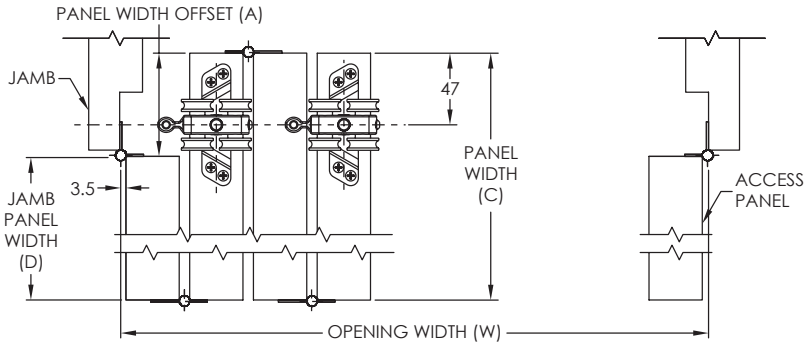

4+1 PANEL SYSTEM - CLOSED

(TYPICAL ELEVATION)

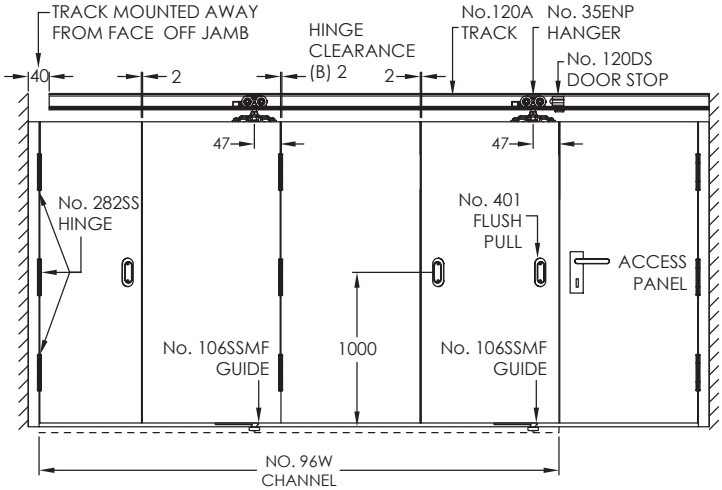

HINGED TO JAMB - PANEL WIDTH CALCULATIONS

A (PANEL WIDTH OFFSET) = HANGER OFFSET (47mm) + ½ PANEL THICKNESS + HINGE PIN OFFSET (3.5mm)
B (TOTAL CLEARANCES) = HINGE CLEARANCE (2mm) X (NUMBER OF PANELS + 1)
C (FULL PANEL WIDTH - FOLDING ONE WAY) = $\frac{\text{OPENING WIDTH + A - B}}{\text{NUMBER OF FULL PANELS}}$
C (FULL PANEL WIDTH - FOLDING TWO WAYS) = $\frac{\text{OPENING WIDTH + (A X 2) - B}}{\text{NUMBER OF FULL PANELS}}$
D (JAMB LEAF WIDTH) = FULL PANEL WIDTH C - A